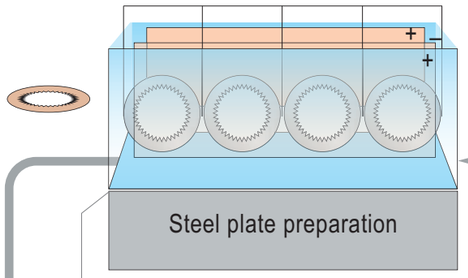

Surface grinding, coating of the steel plate surface by electroplating in galvanic bath (galvanizing)

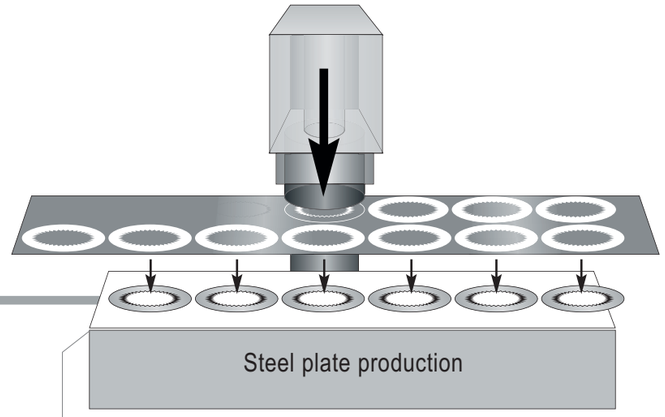

Manufacturing through punching and laser cutting in special tools, also further processing of counter steel plates (steel opposing plates)

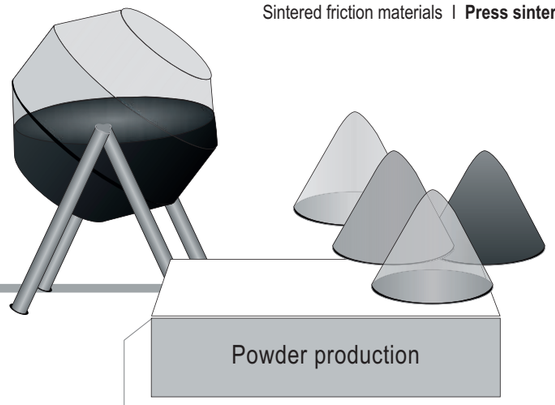

Mixing and blending of metal powders, additives, graphite, binder etc. e.g. containing electrolytic copper powder of high purity and excellent pressing and sintering properties

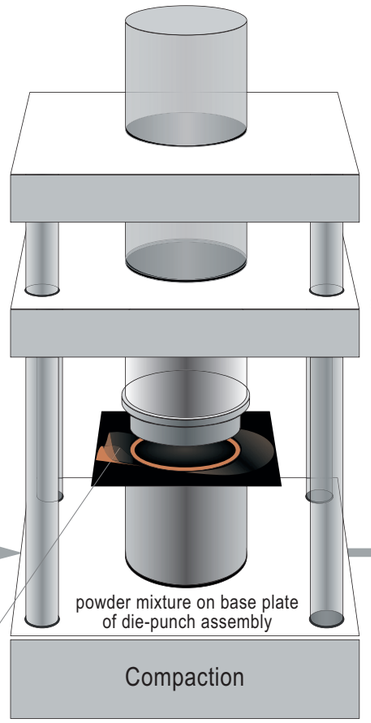

Densification of powder to green compacts (pressed powder parts) in special designed compacting tools

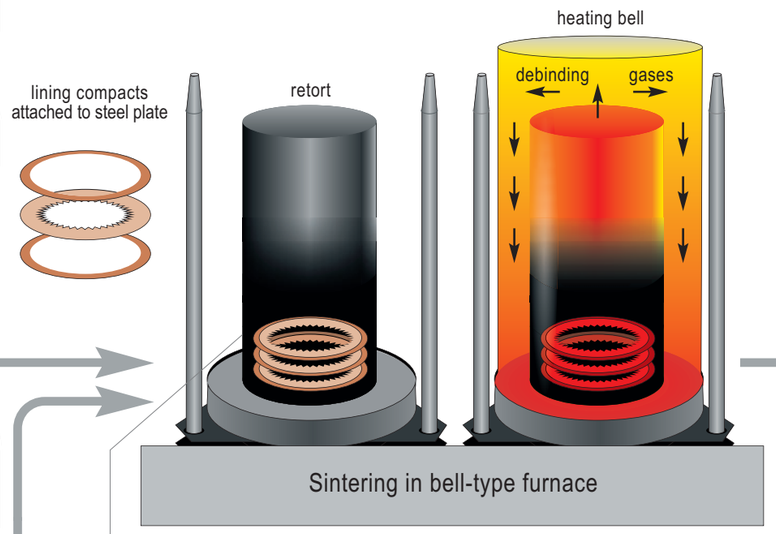

Sintering process under pressure and protective atmosphere in about 2½ hours, annealing below the melting temperature of main constituent, diffusion and recrystallization processes

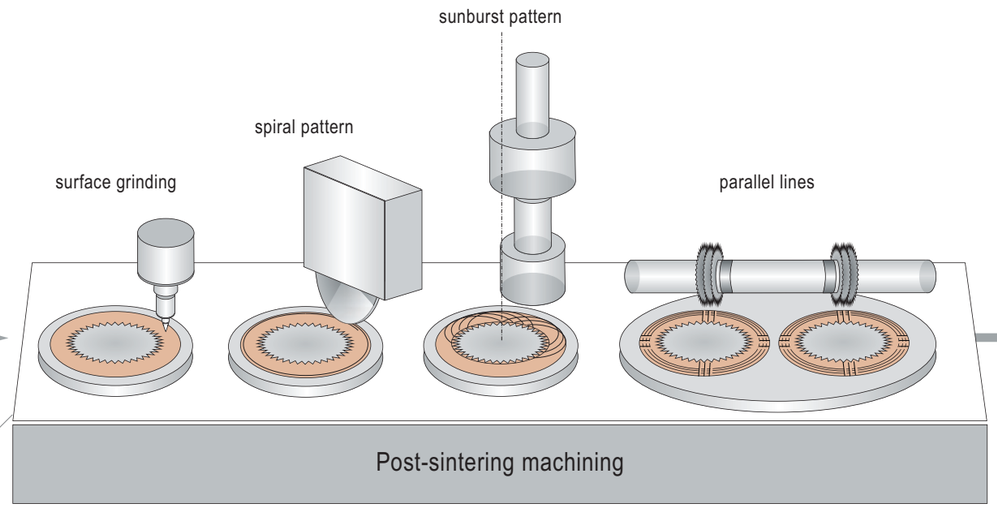

Surface grinding, milling of groove patterns and channels (e.g. honeycomb pattern, radial or spiral grooving patterns, circular grooves)

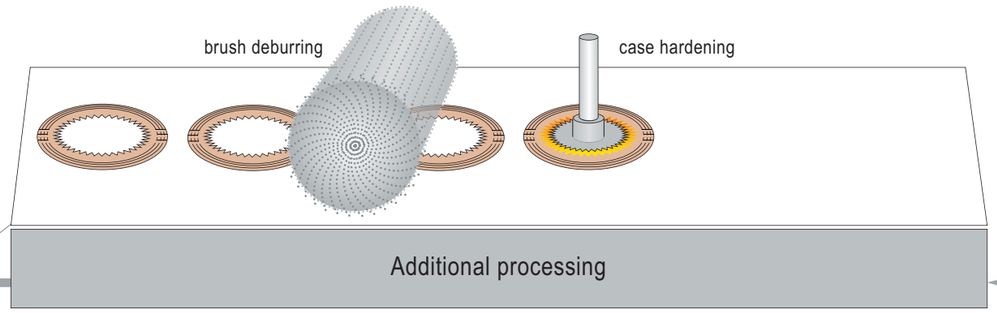

Brushing and deburring edges, surface polishing, further heat treatment such as hardening or surface hardening

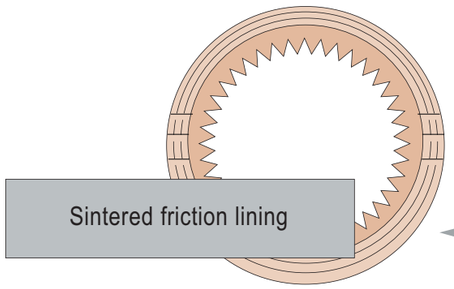

NB PARTS®
Brake Components

Misprint, errors and subject to change without notice excepted. Edition: 01/2018 © NB PARTS GmbH, Daimlerstraße 7, D-91301 Forchheim, Germany, Tel. +49 (0)9191 34 16 200, Fax +49 (0)9191 34 16 299 , Internet www.nb-parts.de , info@nb-parts.de
The visual presentation serves only for better understanding and does not warrant liability. Terms of delivery by GSC, dated 01.01.2008, Register no.: HRB 6248, Register court: Bamberg District Court, VAT reg. no.: DE 263 015 356